WIRING DIAGRAM

VC 5RX volume control.

Switch for active or passive mode selection.

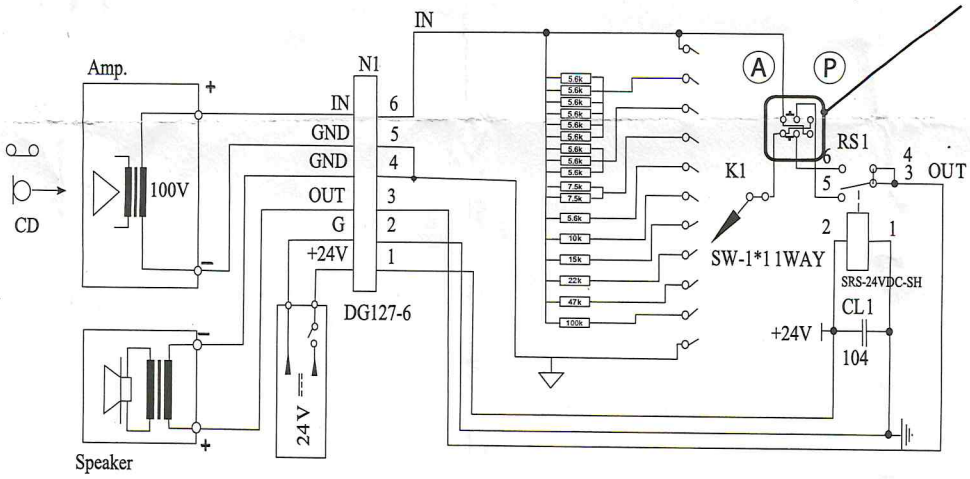

VC 30RX / VC 60RX volume control.

Switch for active or passive mode selection.

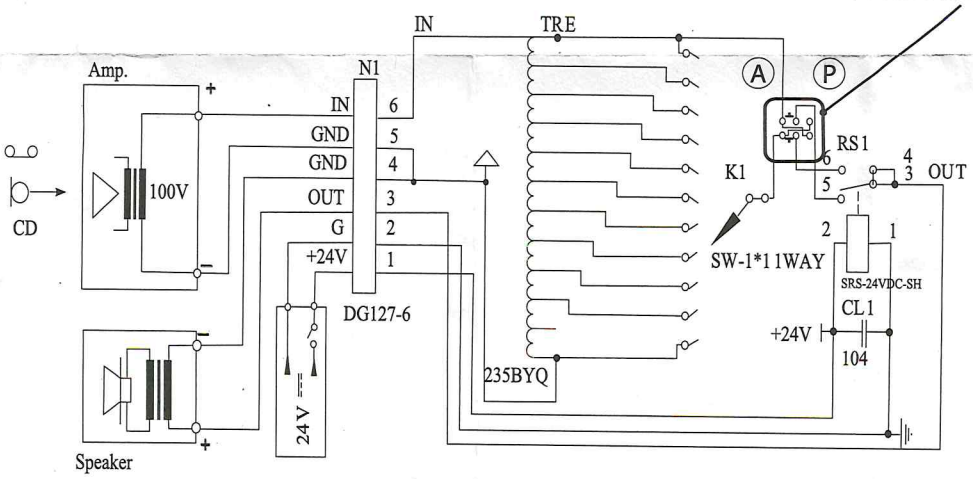

(P) Passive mode: VC X attenuates the volume if 24V is not connected to 24V terminal. After the voltage supplying, VC X sets the maximum volume level.

(A) Active mode: VC X set the maximum volume level if 24V is not connected to 24V terminal. After the voltage supplying, VC X starts attenuate volume.

AMC Baltic reserves the right to improve products at any time. Specifications are subject to change without notice.

AMC® is a registered trademark of AMC Baltic